ARTWORK APPROVAL FORM - PAGE 1/2

ORDER DETAILS

ORDER NUMBER: X
ITEM CODE: SG1014

QUANTITY	XS	S	M	L	XL	XXL	3XL	4XL
MEN:	-	-	-	-	-	-	-	-
WOMEN:	-	-	-	-	-	-	-	-
UNISEX:	-	-	-	-	-	-	-	-

ITEM DETAILS

FABRIC:	POLYESTER MESH / POLYESTER CHEQUERED
SIZE INDICATION:	STANDARD NECK LABEL / CUSTOM NECK PRINT
CARE LABEL:	STANDARD / CUSTOM
SHORTS ADDED:	Y / N
X:	X

MATERIAL COLOURS

FABRIC:	WHITE
SHORTS CORD:	N/A / WHITE / BLACK / OWN PMS
STITCHES:	MATCHING
X:	X
X:	X

SCALE 1:10

FRONT - MEN
ATTENTION 1

SCALE 1:2

INDIVIDUAL NAME & NUMBER DESIGN
FONT NAME: XX

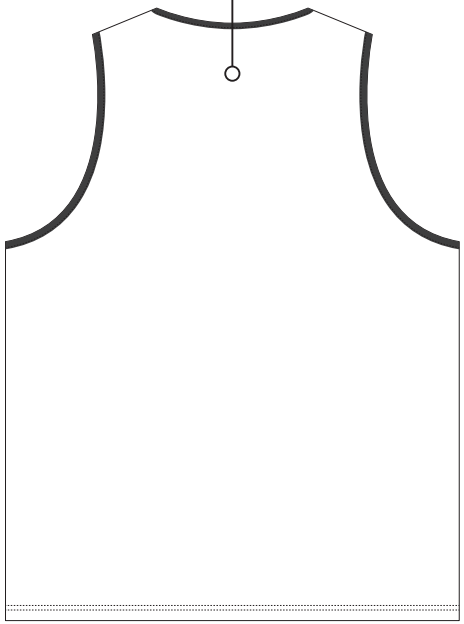

BACK - MEN
ATTENTION 1

CUSTOM CARE LABEL
ATTENTION 1

SCALE 1:4

CUSTOM NECK PRINT
ATTENTION 1

yourChoice

SIZE GROUP	WOMEN	MEN	LOGO SIZE
GROUP 1	XS-XL	S-L	STANDARD
GROUP 2	XXL-4XL	XL-4XL	PLUS CA. 5%*

*OR DIFFERENT, IF REQUESTED.

GENERAL COMMENT:
OUR SIZING TOLERANCE IS +/- 2 cm. SINCE THE GARMENTS ARE PRINTED CMYK THE FINAL PRINT COLOURS CAN BE UP TO 15% VARIANCE IN COLOUR AND SHADING FROM ORIGINAL ARTWORK SUPPLIED.

ATTENTION 1:

GENERAL COMMENT:
THE IMPRESSION OF IMPRINT SCALE DEPENDS ON ITEM SIZE.
SIZE OF THE ITEM ON THE PROOF: 4XL

ATTENTION 2:

ARTWORK APPROVAL FORM - PAGE 2/2

SCALE 1:10

FRONT - WOMEN

ATTENTION 1

INDIVIDUAL NAME & NUMBER DESIGN

FONT NAME: XX

BACK - WOMEN

ATTENTION 1

yourChoice

GENERAL COMMENT:
OUR SIZING TOLERANCE IS +/- 2 cm. SINCE THE GARMENTS ARE PRINTED CMYK THE FINAL PRINT COLOURS CAN BE UP TO 15% VARIANCE IN COLOUR AND SHADING FROM ORIGINAL ARTWORK SUPPLIED.

ATTENTION 1:

GENERAL COMMENT:
THE IMPRESSION OF IMPRINT SCALE DEPENDS ON ITEM SIZE.
SIZE OF THE ITEM ON THE PROOF: 4XL

ATTENTION 2:

SG1014

PROMOTIONAL SUBLIMATION SPORTS TANK TOP

Material: 140 gsm Polyester Mesh
100 gsm Polyester Chequered
Technique: Sublimation

SCALE 1:1

POLYESTER MESH / CHEQUERED - STANDARD COLOUR

WHITE

SHORTS CORD - STANDARD COLOURS

WHITE BLACK

EXAMPLE STANDARD
CARE LABEL 3,8 x 6 cm

EXAMPLE STANDARD
NECK LABEL 1 x 1 cm

OPTIONAL
CUSTOM CARE LABEL
MAX SIZE 4 x 4 cm (FOLDED)

OPTIONAL
CUSTOM NECK PRINT
MAX SIZE 10 x 10 cm

FRONT - MEN

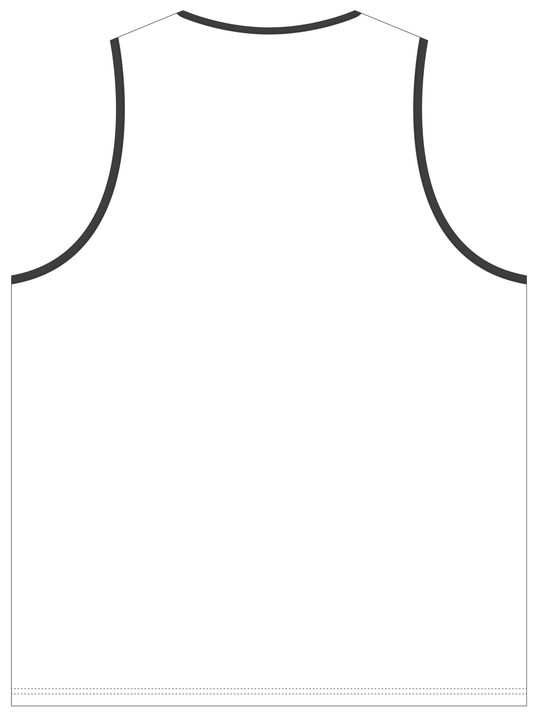

BACK - MEN

FRONT - WOMEN

BACK - WOMEN

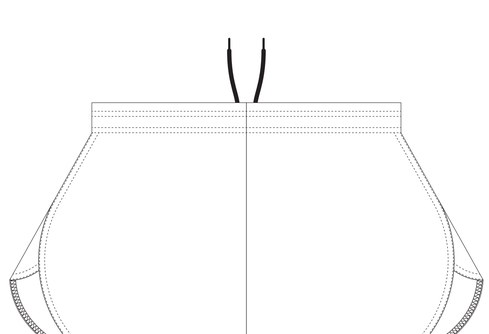

FRONT - MEN
SG2021

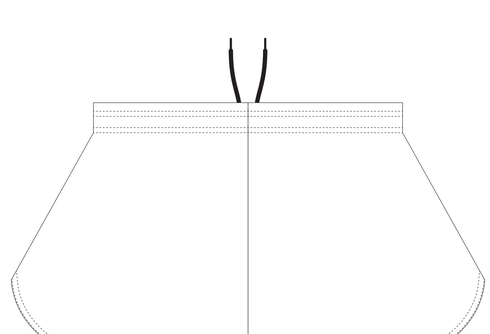

BACK - MEN
SG2021

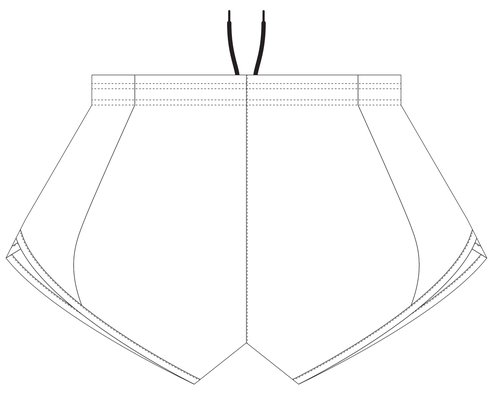

FRONT - WOMEN
SG2021

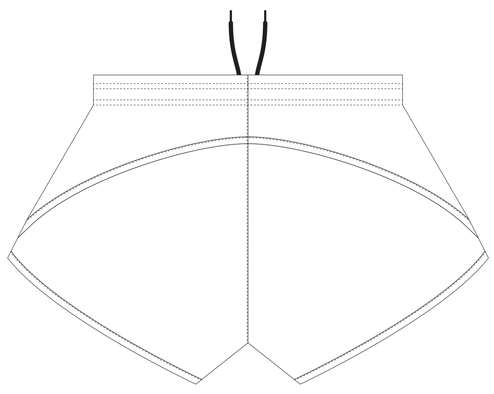

BACK - WOMEN
SG2021